840.560 (33.22) 2B 6
Inset stainless steel sink with two bowls

Lifetime warranty

Antibacterial

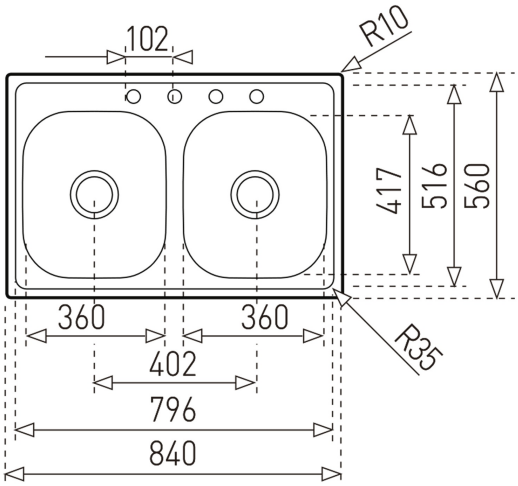

REFERENCE

REF: 40136642 EAN: 8421152104248

FEATURES

Stainless steel sink
Two bowls
Inset installation
3½" manual waste without overflow
153 mm deep bowls
80 cm base unit

DIMENSIONS

Product height (mm):
Product width (mm): 560
Product depth (mm): 153
Product length (mm): 840
Net weight (Kg):

COLOURS

40136642 Stainless steel

40136671 Stainless steel