Nerissa 50 1B 1D
Inset stainless steel sink with one bowl and one drainer

Lifetime warranty

Antibacterial

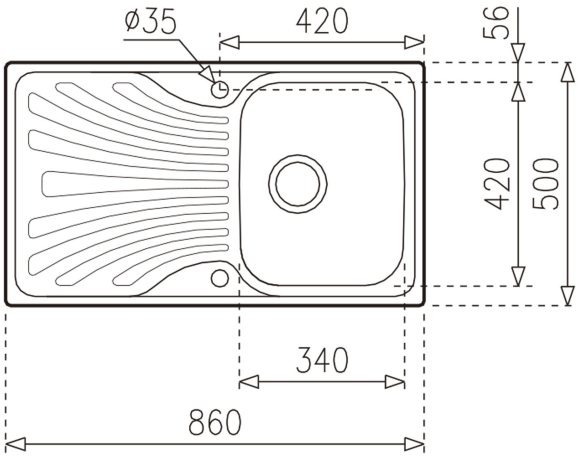

REFERENCE

REF: 40109210 EAN: 8421152044124

FEATURES

Stainless steel sink
One bowl and one drainer
Inset installation
3½" manual basket waste with siphon
150 mm deep bowl
45 cm base unit

DIMENSIONS

Product height (mm):
Product width (mm): 500
Product depth (mm): 150
Product length (mm): 860
Net weight (Kg): 3,42

COLOURS

40109210 Stainless steel