Universe 50 T-XP 1B 1D MAX

Inset reversible stainless steel sink



Lifetime warranty

Antibacterial

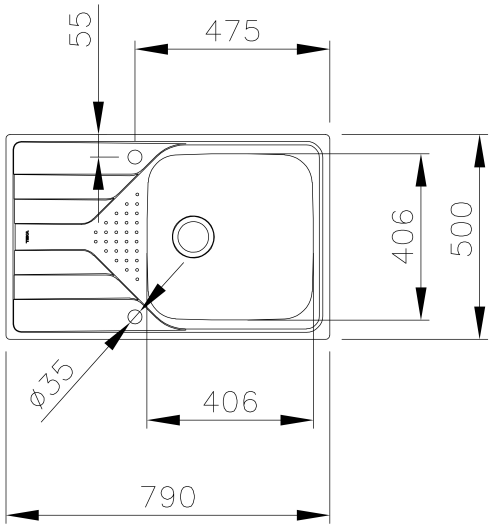

REFERENCE

REF: 115110017 **EAN:** 8434778015010

FEATURES

Universe Series
Stainless steel sink, Polished finish
One bowl and one drainer, reversible
Inset installation
3½" manual basket waste and siphon
175 mm deep bowl
50 cm base unit

DIMENSIONS

Product height (mm):
Product width (mm): 500
Product depth (mm): 175
Product length (mm): 790
Net weight (Kg): 3,79

COLOURS

115110017 Stainless steel