Universe 80 T-XP 2B

Inset stainless steel sink in 80 cm



REFERENCE

REF: 115040007 **EAN:** 8434778015188

FEATURES

Universe Series
Stainless steel sink, Polished finish
Two bowls
Inset installation
3½" manual basket waste and siphon
170 mm deep bowls
80 cm base unit

Lifetime warranty

Antibacterial

DIMENSIONS

Product height (mm):
Product width (mm): 500
Product depth (mm): 170
Product length (mm): 790
Net weight (Kg): 3,72

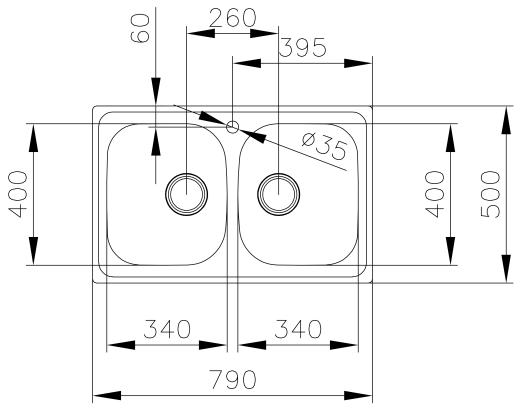

COLOURS

115040007 Stainless steel