ML
Single lever kitchen tap with swivel spout

Anti-scale aerator

Swivel spout

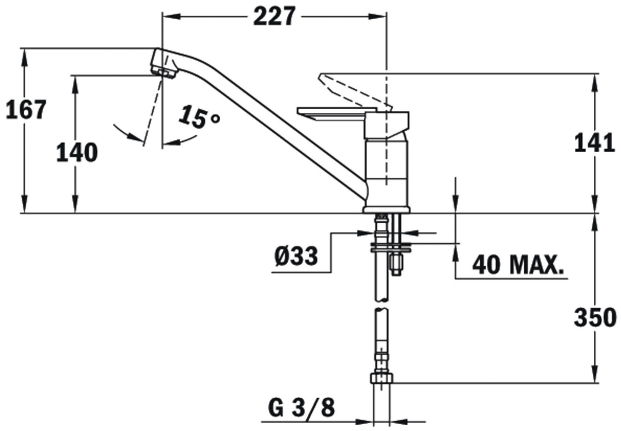

REFERENCE

REF: 81913620T EAN: 8421152134986

FEATURES

Low spout kitchen tap
Swivel spout
Anti-scale aerator
Cartridge with ceramic discs of high resistance
Highly precise temperature control
Greater handling sensitivity with smoother movements
3/8" flexible inlet pipes

DIMENSIONS

Product height (mm): 167
Product width (mm):
Product depth (mm):
Product length (mm):
Net weight (Kg): 1

COLOURS

81913620T Topasbeige

8191362 Chrome