Brooklyn 80 M-XP 2B 1D

2-in-1 installation reversible stainless steel sink with two bowls and one drainer



REFERENCE

REF: 115160010 **EAN:** 8434778019667

FEATURES

Brooklyn Series
Stainless steel sink, Polished finish
Two bowls and one drainer, reversible
2-in-1 installation possibilities: top or flush
V-control 3½" automatic waste basket with siphon
New HelixPRO waste basket
SilentSmart, 50% less noise
210 mm deep bowl
80 cm base unit

Antibacterial

DIMENSIONS

Product height (mm):
Product width (mm): 504
Product depth (mm):
Product length (mm): 1164
Net weight (Kg): 8,2

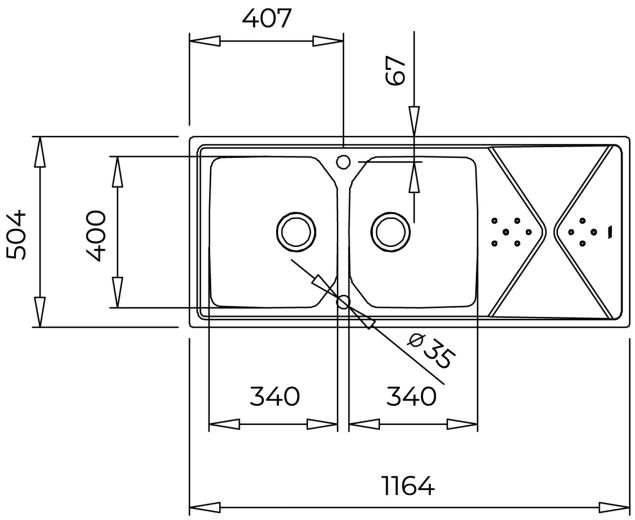

COLOURS

115160010 Stainless steel