Nova 90 B-TG 2B
Inset Nova Series sink with two bowls

REFERENCE

REF: 115260043 EAN: 8434778023893

FEATURES

Nova Series
Tegranite+ sink
Two bowls
Inset installation
3½” automatic waste basket with siphon
HelixPro waste basket
200 mm deep bowls
90 cm base unit

200mm depth | Colour Intensity | Easy Clean | Food safe | High resistance

DIMENSIONS

Product height (mm):
Product width (mm): 510
Product depth (mm):
Product length (mm): 860
Net weight (Kg): 14,12

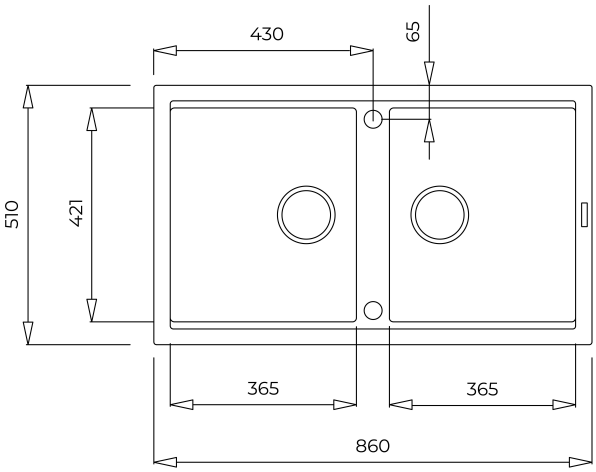

COLOURS

115260043 Artic white