Nova 60 L-TG 1B 1D

Inset Nova Series sink with one bowl and one drainer

REFERENCE

REF: 115330061 EAN: 8434778023923

FEATURES

Nova Series
Tegranite+ sink
One bowl and one drainer
Inset installation
3½” automatic waste basket with siphon
HelixPro waste basket
200 mm deep bowl
60 cm base unit

200mm depth | Colour Intensity | Easy Clean | Food safe | High resistance

DIMENSIONS

Product height (mm):
Product width (mm): 510
Product depth (mm):
Product length (mm): 1000
Net weight (Kg): 15,68

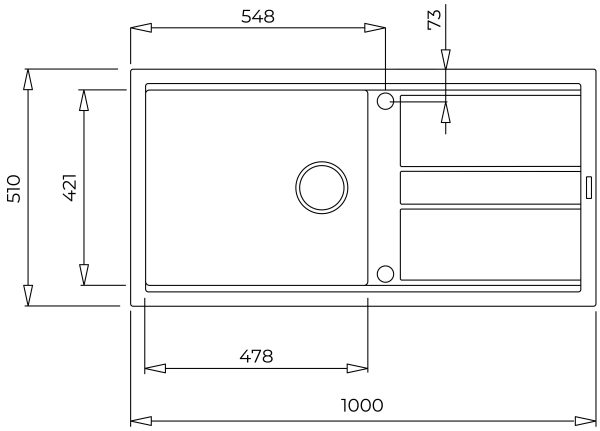

COLOURS

115330061 Artic white