Sommelier RVU 10008 GBK

Built-in wine cooler with capacity for 8 bottles and adjustable temperature control





Motor Inverter



LED

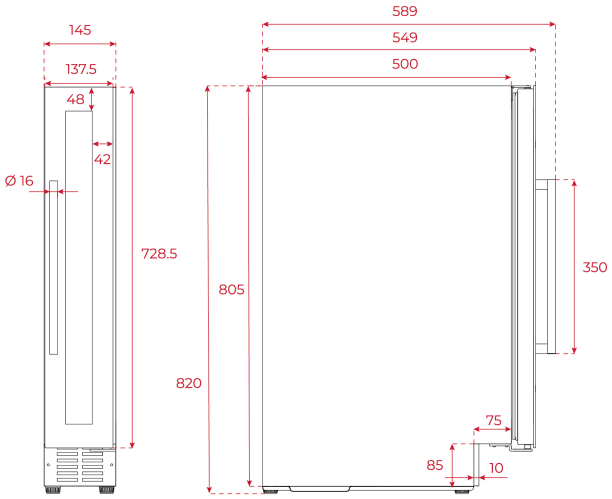

REFERENCE

REF: 113610003 **EAN:** 8434778021080

FEATURES

Built-in Wine Cooler
Inner control display
Electronic adjustable thermostat
Capacity: 8 bottles
Front and back adjustable feet
LED Illumination
Reversible doors
Climate class: N/ST
Total capacity (Gross/net): 25 / 23 litres

DIMENSIONS

Product height (mm): 820
Product width (mm): 145
Product depth (mm): 549
Product length (mm):
Net weight (Kg): 21.5

COLOURS

113610003 Black glass