Stone siphon
Stone Siphon

REFERENCE

REF: 115890004 EAN: 8434778006681

FEATURES

Stone siphon

DIMENSIONS

Product height (mm):
Product width (mm):
Product depth (mm):
Product length (mm):
Net weight (Kg):

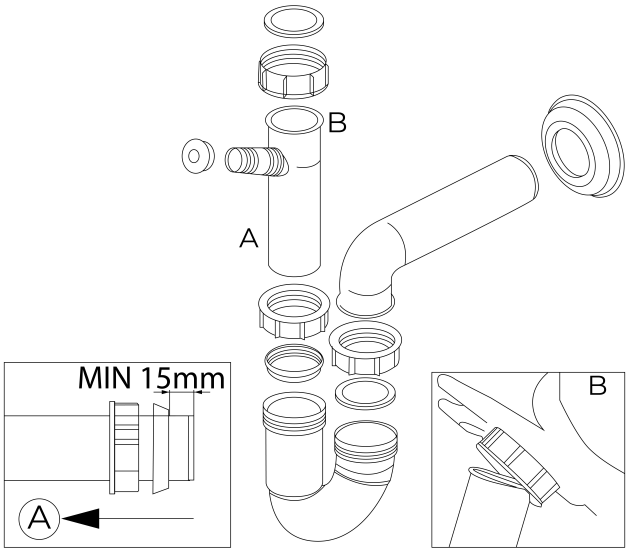

COLOURS

115890004 White