SE 915

Single lever kitchen tap with high spout swivel





Anti-scale aerator



Swivel spout

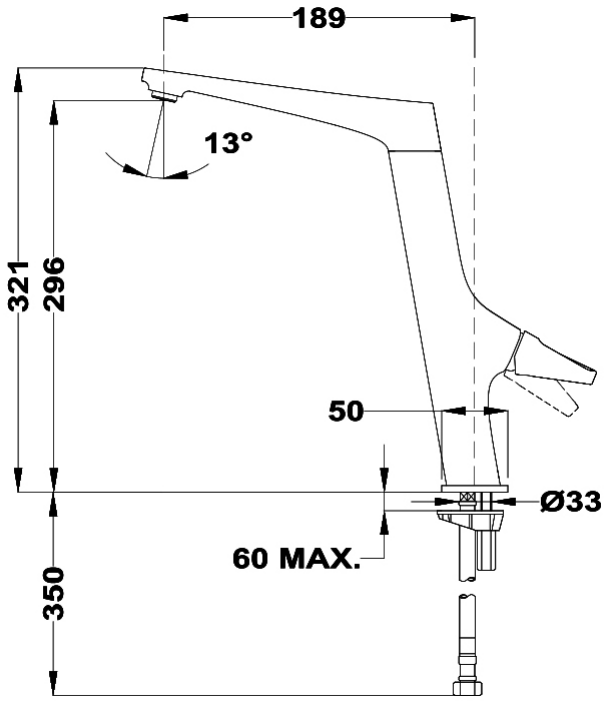

REFERENCE

REF: 116030030 **EAN:** 8434778008951

FEATURES

High spout kitchen tap
Swivel Spout
Anti-scale aerator
Purity of natural forms
Cartridge with ceramic discs of high resistance
Highly precise temperature control
Greater handling sensitivity with smoother movements
3/8" - 1/2" flexible inlet pipes

DIMENSIONS

Product height (mm): 321
Product width (mm):
Product depth (mm):
Product length (mm):
Net weight (Kg): 1,95

COLOURS

116030030 Chrome