MestrePaeller ITC 63320 MPS BK
Induction hob with MultiSlider touch control and a special XL cooking zone for Paella

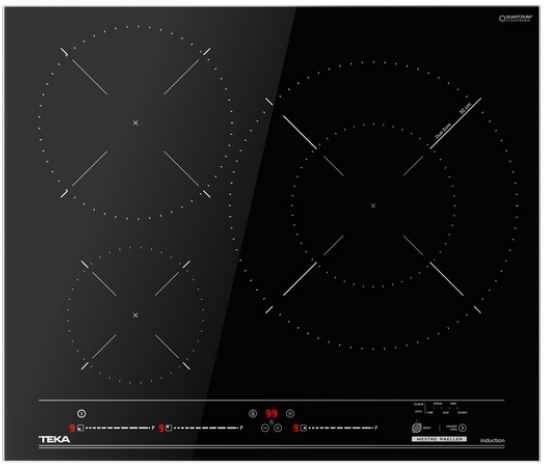

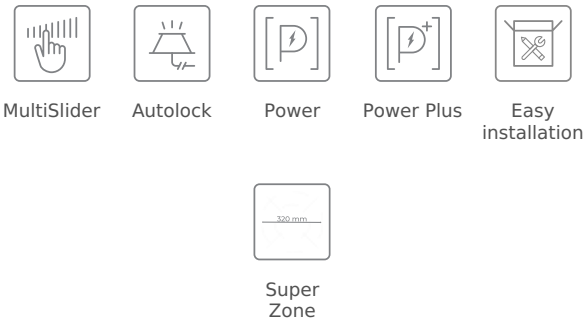

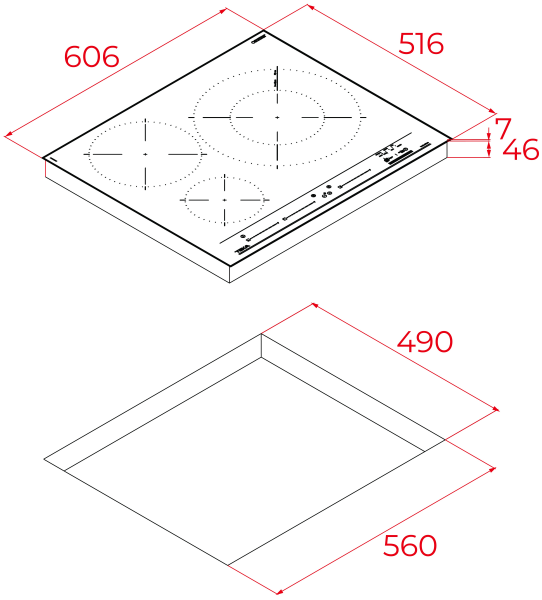

REFERENCE

REF: 112510044 EAN: 8434778027082

FEATURES

Induction hob
Touch Control MultiSlider
3 cooking zones:
1 double zone Ø 320/180 mm
1 zone Ø 215 mm
1 zone Ø 150 mm
Ceramic glass surface
Safety disconnection
Cooking timer
Power plus
Child lock
Residual heat indicator
Power management
Easy installation kit
Maximum nominal power 7200 W
Optional: Grilling plate and Teppanyaki

DIMENSIONS

Product height (mm): 53
Product width (mm): 606
Product depth (mm): 516
Product length (mm):
Net weight (Kg): 10,7

TECHNICAL DETAILS

Power rate (V): 220-240
Frequency (Hz): 50/60
Maximum Nominal Power (W): 7200

COLOURS

112510044 Black glass

ENERGY EFFICIENCY

Power consumption in standby mode (W): 0.4
Time to reach standby mode (min): 1