HLC 8440 C FBK

FullBlack Edition. Multifunction compact oven with microwave, 9 cooking functions and HydroClean system

40L | HydroClean steam cleaning system | SurroundTemp

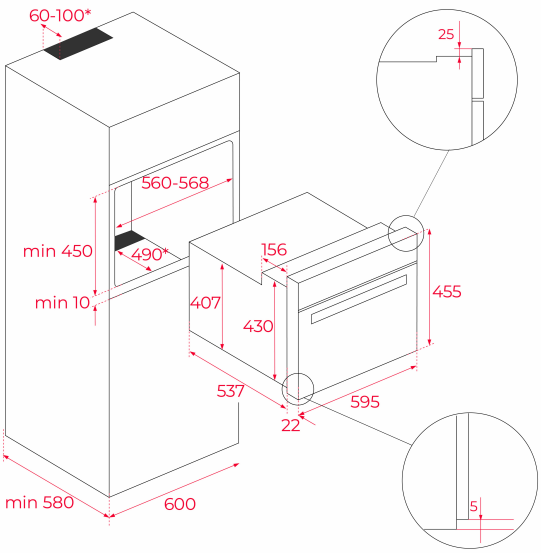

REFERENCE

REF: 111160028 EAN: 8434778030051

FEATURES

Multifunction oven + Microwave
Exclusive black glass + dark inox finishing
11 cooking functions
5 power levels + 1.000 W microwave power
2.500 W MaxiGrill
HydroClean system
Touch control display with knobs
Electronic timer (Delay/Start function)
Chrome supports with 4 cooking levels
Removable triple glazed door
Automatic disconnection security system
Manual quick preheating
Anti-tip deep tray
Capacity (gross/net): 41 /40 litres

DIMENSIONS

Product height (mm): 455
Product width (mm): 595
Product depth (mm): 559
Product length (mm):
Net weight (Kg): 30,0

TECHNICAL DETAILS

Energy Efficiency Class: -
Power rate (V): 220-240
Frequency (Hz): 50
Maximum Nominal Power (W): 3400

COLOURS

111160028 Full Black