AirFry HCB 6646 P SS

Multifunction pyrolytic oven with special AirFry function and 9 cooking functions





70L



Plus extension guides: 75% extraction



HydroClean steam cleaning system



Pyrolysis cleaning system



SurroundTemp

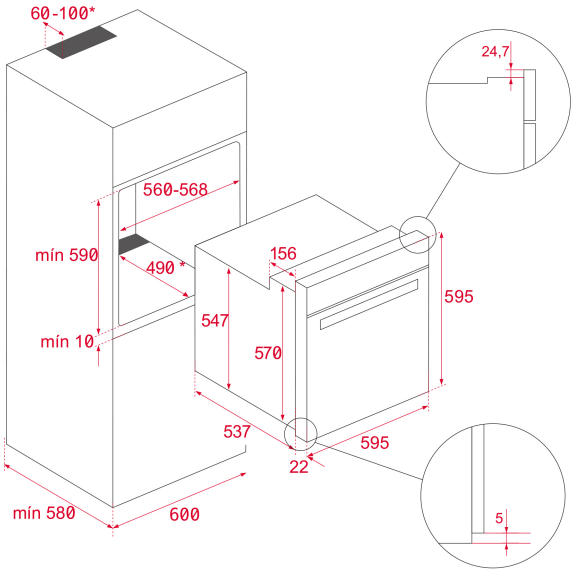

REFERENCE

REF: 111010027 **EAN:** 8434778018035

FEATURES

Automatic AirFry function
FryMaster Box, special perforated pan for frying
HydroClean® PRO cleaning system
SurroundTemp Multifunction
9 cooking functions
Capacity, gross / net: 71/70 liters
Energy class A +
Touch programmer
Telescopic guides
Double glazed door
Enamel deep tray and grid

DIMENSIONS

Product height (mm): 595
Product width (mm): 595
Product depth (mm): 537+22
Product length (mm):
Net weight (Kg): 31

TECHNICAL DETAILS

Energy Efficiency Class: A+
Power rate (V): 220-240
Frequency (Hz): 50/60
Maximum Nominal Power (W): 2615

COLOURS

111010027 Stainless steel