Kit VS/CP BK

Urban Colors Edition. Front glass for vacuum sealer and plate warmer drawers

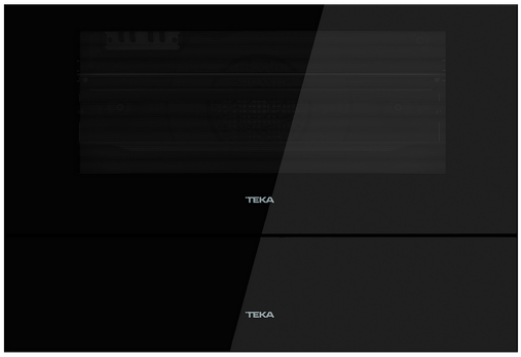

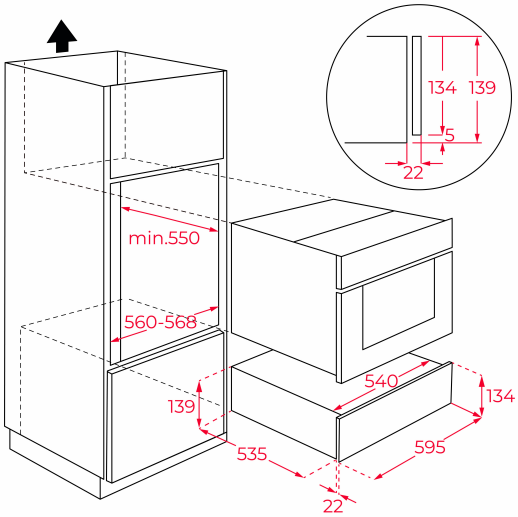

REFERENCE

REF: 111890002 **EAN:** 8434778008487

FEATURES

Urban Colors Edition
Glass frontal panel
Compatible with VS vacuum sealer drawers
Compatible with CP plate warmer drawers
Dimensions (WxHxD): 595x140x4 mm
Black finish

DIMENSIONS

Product height (mm): 140
Product width (mm): 595
Product depth (mm): 4
Product length (mm):
Net weight (Kg): 1.4

TECHNICAL DETAILS

Energy Efficiency Class: -
Power rate (V): -
Frequency (Hz): -
Maximum Nominal Power (W): -

COLOURS

	111890002	Black glass
	111890003	White glass
	111890006	London brick brown glass
	111890005	Steam grey glass
	111890004	Stone grey glass
	111490017	Black matt
	111890008	Anthracite silver
	111890007	Reflex glass