HLC 8470 SC BK

Multifunction CombiSteam compact oven with HydroClean system





44L



MeatProbe



HydroClean steam cleaning system



SoftClose



SurroundTemp

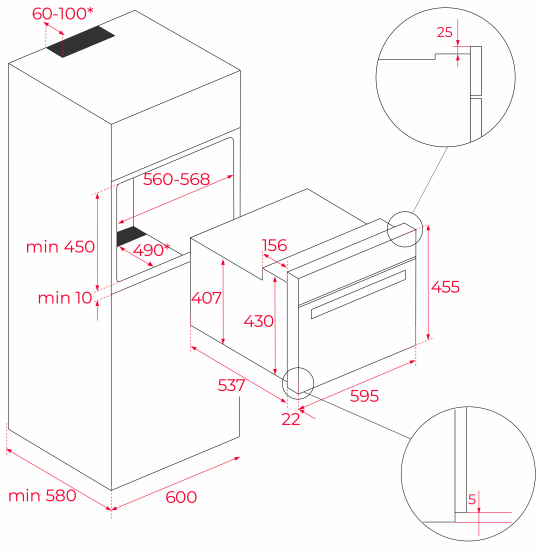

REFERENCE

REF: 111230011 **EAN:** 8434778024579

FEATURES

Multifunction SurroundTemp oven + Steamer
15 cooking functions
Temperature range 35-100ºC
1 L water tank
Automatic HydroClean® system
Touch control display with knobs
Personal cooking assistant: 20 automatic programs
Slow cook, sterilization and regeneration function
Chrome supports with 5 cooking levels
Removable quadruple glazed door
SoftClose system
Automatic disconnection security system
Automatic quick preheating
Anti-tip deep tray, reinforced grid and Gastronorm tray
Special grid for perforated tray included and MeatProbe
Capacity (gross/net): 45 / 44 litres

DIMENSIONS

Product height (mm): 455
Product width (mm): 595
Product depth (mm): 559
Product length (mm):
Net weight (Kg): 28

TECHNICAL DETAILS

Energy Efficiency Class: A+
Power rate (V): 220-240
Frequency (Hz): 50-60
Maximum Nominal Power (W): 3000

COLOURS

111230011 Black