WMK 10620 WH

Washing machine with 6 kg capacity and 15 programs

Quick Cycle

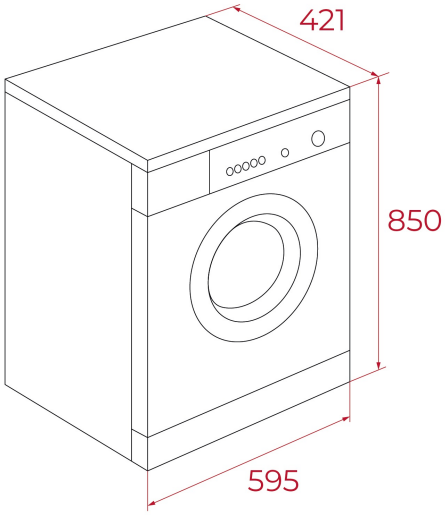

REFERENCE

REF: 113920010 EAN: 8434778032581

FEATURES

Free standing washing machine
Electronic control panel
Washing capacity: 6 kg
15 washing programs
Special programs: Fast: 15 minutes, ECO mode, Wool, Delicate, Sport, Cotton, BabyCare, Jeans
Special functions: Delay timer, Speed wash, Steam, Extra rinse, Prewash, DrumClean reminder, Mute
Maximum spinning speed: 1200 RPM
Automatic water regulation
Automatic door lock safety system
Child lock
Balance control system
SoftCare drum
28,8 cm wide porthole door

DIMENSIONS

Product height (mm): 850
Product width (mm): 595
Product depth (mm): 465
Product length (mm):
Net weight (Kg): 55

TECHNICAL DETAILS

Energy efficiency class (UE 2019/2016): D
Washing performance Class: /
Spinning efficiency class: C
Water consumption (litres/year): /
Noise Level (dBA): + 78
Power rate (V): 220-240 V~
Frequency (Hz): 50 Hz

COLOURS

113920010 White