WMK 70840 WH

Washing machine with 8 kg capacity, touch control and 14 programs

Quick Cycle

REFERENCE

REF: 113900016 EAN: 8434778032642

FEATURES

Free standing
Electronic control panel
Washing capacity: 8 kg
14 washing programs
Special programs: Fast: 15 minutes, ECO mode, Wool, Delicate, Sport, Cotton, BabyCare, Jeans, Sterilization
Special functions: Delay timer, Speed wash, Steam, Extra rinse, Prewash, DrumClean reminder, Mute, Soil level, Night wash, Memory
Maximum spinning speed: 1400 RPM
Automatic water regulation
Automatic door lock safety system
Child lock
Balance control system
SoftCare drum
33 cm wide porthole door

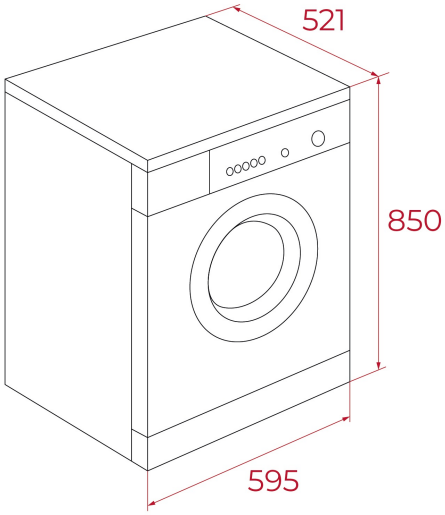

DIMENSIONS

Product height (mm): 850
Product width (mm): 595
Product depth (mm): 540
Product length (mm):
Net weight (Kg): 63

TECHNICAL DETAILS

Energy efficiency class (UE 2019/2016): A
Washing performance Class: /
Spinning efficiency class: B
Water consumption (litres/year): /
Noise Level (dBA): + 72
Power rate (V): 220-240 V~
Frequency (Hz): 50 Hz

COLOURS

113900016 White