WDK 81050 WH

Washer-dryer with 10kg washing capacity and 7kg drying capacity

Quick Cycle

REFERENCE

REF: 113960013 EAN: 8434778032680

FEATURES

Free standing Washer-Dryer
Electronic control panel
Washing capacity: 10 kg
Drying capacity: 7 kg
Fast program: 15 min
ECO mode program
Wool care program
Delicate program
Delay timer function
Speed wash function
Steam function
Extra rinse function
Condenser dryer
Maximum spinning speed: 1500 RPM
Automatic water regulation
Automatic door lock safety system
Child lock
33 cm wide porthole door

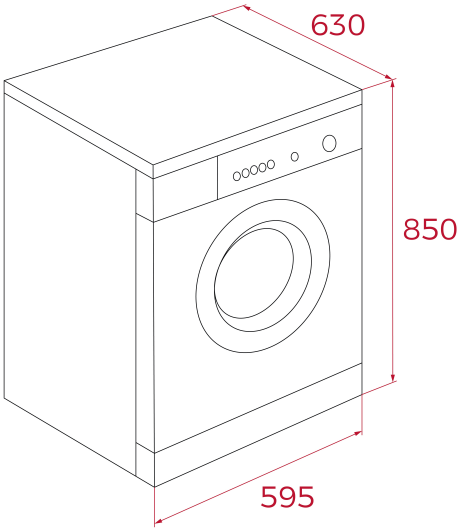

DIMENSIONS

Product height (mm): 850
Product width (mm): 595
Product depth (mm): 630
Product length (mm):
Net weight (Kg): 72

TECHNICAL DETAILS

Energy efficiency class (UE 2019/2016): B
Washing performance Class: B
Spin-drying Efficiency Class: B
Energy Consumption (Kw/day): -
Water consumption (litres/year): -
Noise Level (dBA): + 80 +
Power rate (V): 220-240 V~
Frequency (Hz): 50 Hz

COLOURS

113960013 White