DFI 46720

Fully integrated dishwasher with 13 place settings and 6 programs





Eco Function



AutoDoor opening system

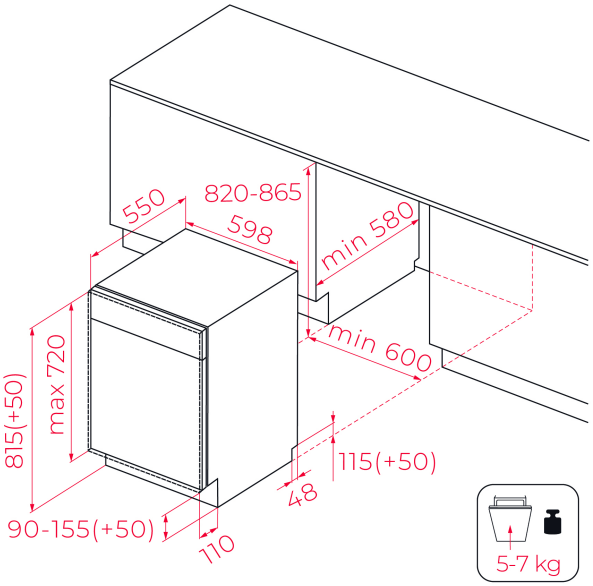

REFERENCE

REF: 114270036 **EAN:** 8434778032710

FEATURES

Fully integrated dishwasher
Electronic control panel with white display
Capacity: 13 plate settings
Washing programs: 6
Washing temperatures: 45º, 50º, 55º, 60ºC
PremiumDry automatic opening system
Special programs: Fast: 30 minutes, GlassCare, Intensive, ECO, 1-Hour
Special function: Half load
AquaStop and AquaSafe safety system
Low salt and rinse indicator
Delay timer: 1-24 hours
Noise level: 47dBA
Adjustable back feet from front
Sliding Detergent drawer

DIMENSIONS

Product height (mm): 815
Product width (mm): 598
Product depth (mm): 550
Product length (mm):
Net weight (Kg): 28,33

TECHNICAL DETAILS

Energy Efficiency Class: A+++
Energy Consumption (Kw/day): -
Water consumption (litres/year): 3080
Noise Level (dBA): 47
Power rate (V): 220-240 V
Frequency (Hz): 50Hz