HSB 6160 SS

Multifunction oven with 6 cooking functions, HydroClean system and push-pull knobs

70L

HydroClean steam cleaning system

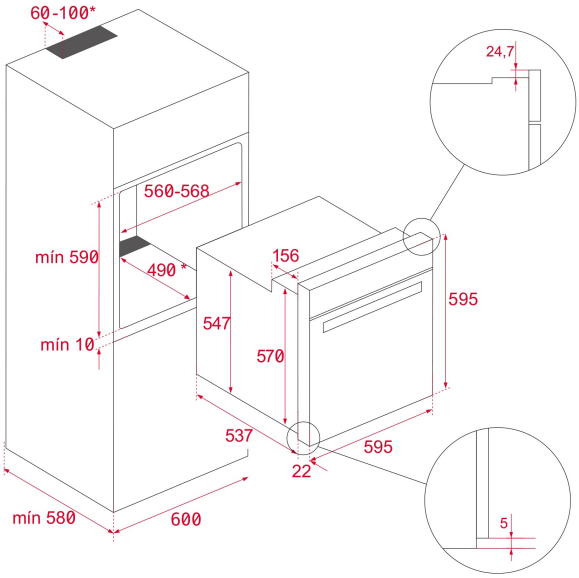

REFERENCE

REF: 111010065 EAN: 8434778033946

FEATURES

Neo Series
Multifunction oven
ThermoSeal System for a stable temperature inside
Ultra-resistant BrightClean enamel
FastClick System for tray supports
Ergonomic and stylish handle
6 cooking functions
HydroClean system
Mechanical control with push-pull knobs
Mechanical timer (Stop function)
Chrome supports with 5 cooking levels
Plus Extension Telescopic guides
Removable double glazed door
Manual quick preheating
Door square pattern
Flat Stainless-Steel panel
Anti-tip deep tray
Fingerprint proof stainless steel
Capacity (gross/net): 71 / 70 litres

DIMENSIONS

Product height (mm): 595
Product width (mm): 595
Product depth (mm): 537+22
Product length (mm):
Net weight (Kg): 27

TECHNICAL DETAILS

Energy Efficiency Class: A
Power rate (V): 220/240
Frequency (Hz): 50/60
Maximum Nominal Power (W): 2615

COLOURS

111010065 Stainless steel