NEO HSC 6350 P SS

Multifunction pyrolytic compact oven with 8 cooking functions

44L | HydroClean steam cleaning system | Pyrolysis cleaning system

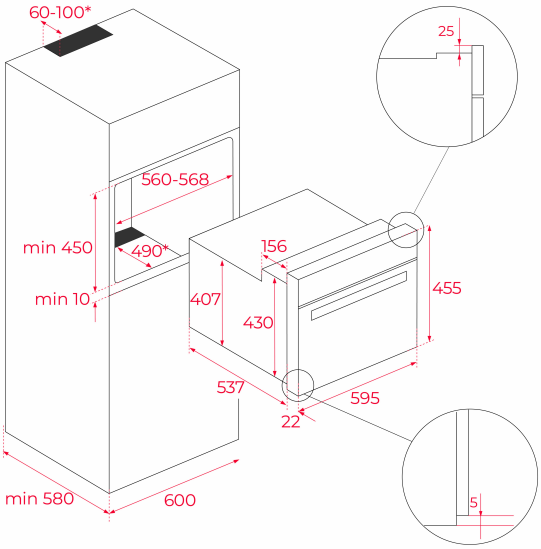

REFERENCE

REF: 111140004 EAN: 8434778034233

FEATURES

Neo Series
Multifunction Pyro oven
ThermoSeal System for a stable temperature inside
Ultra-resistant BrightClean enamel
FastClick System for tray supports
Ergonomic and stylish handle
Wider LED display window
8 cooking functions
Pyrolysis self-cleaning system and automatic HydroClean system
Up to 300°C of cooking
Touch control display with knobs
Electronic timer (Delay/Start function)
Chrome supports with 3 cooking levels
Plus Extension Telescopic guides
Removable triple glazed door
Children safety lock
Automatic disconnection security system
Safety door lock
Manual quick preheating
Grill protection
Door square pattern
Flat Stainless-Steel panel
Anti-tip deep tray
Fingerprint proof stainless steel
Capacity (gross/net): 45 / 44 litres

DIMENSIONS

Product height (mm): 455
Product width (mm): 595
Product depth (mm): 537+22
Product length (mm):
Net weight (Kg): 28

TECHNICAL DETAILS

Energy Efficiency Class: A+
Power rate (V): 220/240
Frequency (Hz): 50/60
Maximum Nominal Power (W): 2515

COLOURS

111140004 Stainless steel