TBC 63620
Vitroceramic hob with 3 cooking zones and functions for paella, rice, and yogurt. 60 cm

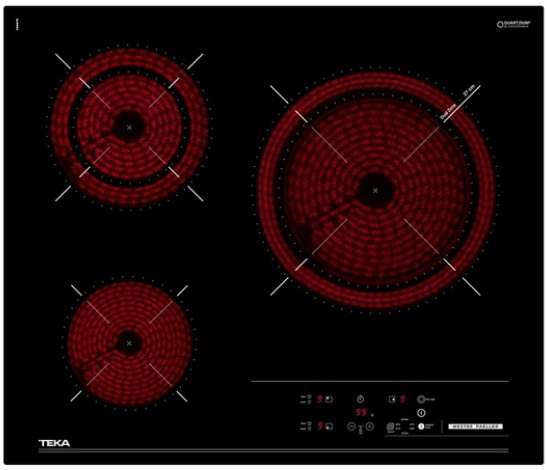

Autolock | Power Plus | Easy installation

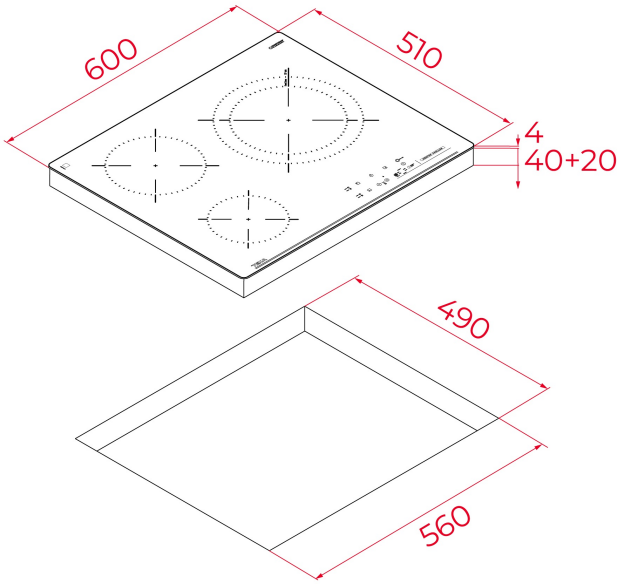

REFERENCE

REF: 112550024 EAN: 8434778030440

FEATURES

Vitroceramic hob
Direct functions: rice cooking, paella, yogurt
Touch Control
3 cooking zones
1 double high light Ø 270/210 mm
1 double high light Ø 180/120 mm
1 single high light Ø 140 mm
Ceramic glass surface
Auto-lock safety disconnection
Cooking timer
Power plus
Child lock
Residual heat indicator
Easy installation kit
Maximum nominal power 5300 W
Optional accesories: grilling plate & teppan yaki

DIMENSIONS

Product height (mm): 64
Product width (mm): 600
Product depth (mm): 510
Product length (mm):
Net weight (Kg): 7,7

TECHNICAL DETAILS

Power rate (V): 220-240
Frequency (Hz): 50/60
Maximum Nominal Power (W): 5300

COLOURS

112550024 Black glass

ENERGY EFFICIENCY

Power consumption in standby mode (W): -
Time to reach standby mode (min): -