RBF 64660 SS
Total No Frost Free standing bottom freezer refrigerator

Motor Inverter | On Holidays function | Eco Function | Easy 90 | LED | 40L

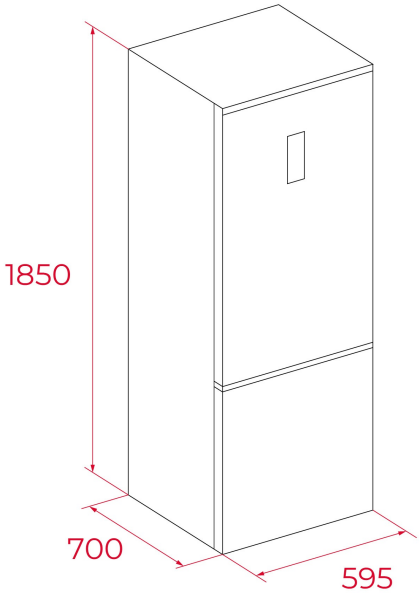

REFERENCE

REF: 113400035 EAN: 8434778035254

FEATURES

Free standing bottom freezer refrigerator
Total No Frost
AirFlow Control
MetalCooling
DualTemp Control
1 ZeroBox drawer
1 FreshBox drawer
1 FlipBox
Reversible doors
LED Illumination
Easy door opening at 90º
Inverter motor
Inner control display
Electronic adjustable thermostat
2 freezer drawers and 1 flap
4 safety glass shelves
2 adjustable balconies
On holidays function
Fast freezing and fast cooling function
Front adjustable feet
ECO function
Acoustic alarm
Climate Class: SN/N/ST/T
Total capacity: 334 litres

DIMENSIONS

Product height (mm): 1850
Product width (mm): 595
Product depth (mm): 700
Product length (mm):
Net weight (Kg): 76

TECHNICAL DETAILS

Energy efficiency class (UE 2019/2016): C
Climate Class: SN/N/ST/T
Energy Consumption (Kw/day): 0.463
Annual Consumption (kWh/year): 169
Freezing Capacity: 8.5
Noise Level (dBA): 35
Power rate (V): 220V-240V
Frequency (Hz): 50Hz

COLOURS

113400035 Stainless steel