RBF 64650 SS
Total No Frost Free standing bottom freezer refrigerator with 400L full capacity

Motor Inverter | On Holidays function | Eco Function | Easy 90 | LED

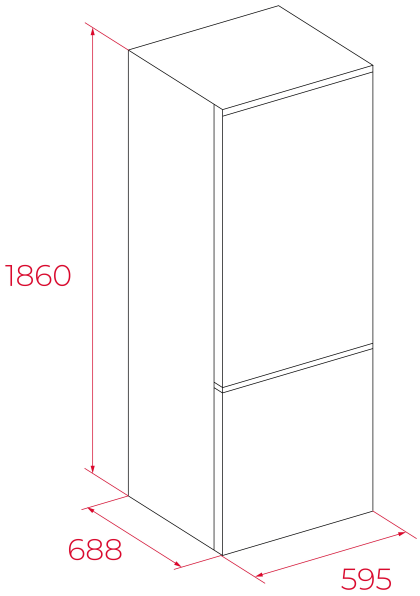

REFERENCE

REF: 113400039 EAN: 8434778035308

FEATURES

Free standing bottom freezer refrigerator
High storage capacity
Total No Frost
AirFlow Control
FreshGuard
Temperature Control
1 FreshBox
Freezer with XL compartments
Reversible doors
LED Illumination
Easy door opening at 90º
Inverter motor
Inner control display
Electronic adjustable thermostat
4 safety glass shelves
3 adjustable balconies
On holidays function
Fast freezing and fast cooling function
Front adjustable feet
ECO Function
Acoustic Alarm
Bottle holder included
Climate class: SN/N/ST/T
Total capacity: 400 litres

DIMENSIONS

Product height (mm): 1860
Product width (mm): 595
Product depth (mm): 688
Product length (mm):
Net weight (Kg): 77.5

TECHNICAL DETAILS

Energy efficiency class (UE 2019/2016): C
Climate Class: SN/N/ST/T
Energy Consumption (Kw/day): 0.477
Annual Consumption (kWh/year): 174
Freezing Capacity: 8.5
Noise Level (dBA): 35
Power rate (V): 220V-240V
Frequency (Hz): 50Hz

COLOURS

113400039 Stainless steel