MWE FS25 G BK

Free standing microwave with grill and 25L capacity

REFERENCE

REF: 112240004 EAN: 8434778029352

FEATURES

Free standing Microwave + grill
Electronic Control panel
5 power levels, 900 W
1000 W grill
Total gross capacity : 25 litres
Painted inner
Minute minder: 0 - 95 minutes
Defrosting by weight and time
Cooking functions: mwo, grill and combi

Defrost By Time

Defrost By Weight

DIMENSIONS

Product height (mm): 280
Product width (mm): 469
Product depth (mm): 377
Product length (mm):
Net weight (Kg): 12,50

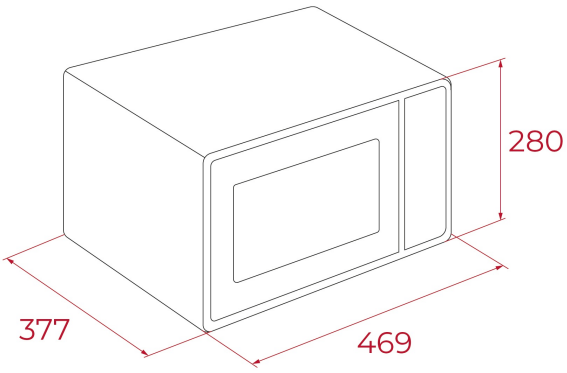

TECHNICAL DETAILS

MWO Power (W): 900W
Frequency (Hz): 50
Maximum Nominal Power (W): -
Grill (W): 1000

COLOURS

112240004 Black