Van Gogh GBC 64 VB VG

Van Gogh Museum Edition. 60cm Gas on Glass hob with 4 cooking zones

Auto ignition

Autolock

Easy installation

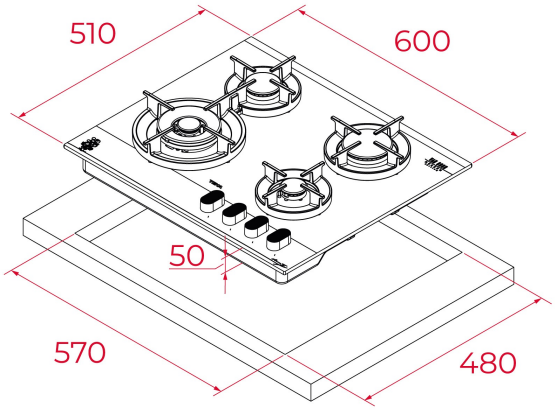

REFERENCE

REF: 112570241 EAN: 8434778032352

FEATURES

Van Gogh Museum Edition
Two-colour finish with champagne details
Gas on glass hob
Frontal mechanical control panel with ergonomic design
4 cooking zones
1 double ring burner, 4,00 kW
1 fast burner, 2,80 kW
1 semirapid burner, 1,75 kW
1 auxiliary burner, 1,00 kW
Tempered glass surface
Auto ignition
Auto-lock safety system
Cast iron grids
Easy installation kit
Maximum nominal power 9550 W
Optional: Wok support

DIMENSIONS

Product height (mm): 95
Product width (mm): 600
Product depth (mm): 510
Product length (mm):
Net weight (Kg): 11,7

TECHNICAL DETAILS

Power rate (V): 220-240
Frequency (Hz): 50/60
Maximum Nominal Power (W): -

COLOURS

112570241 Dark grey and black glass

ENERGY EFFICIENCY

Power consumption in standby mode (W): -
Time to reach standby mode (min): -