UNI 9912
Professional single-lever eco tap with flexible spring

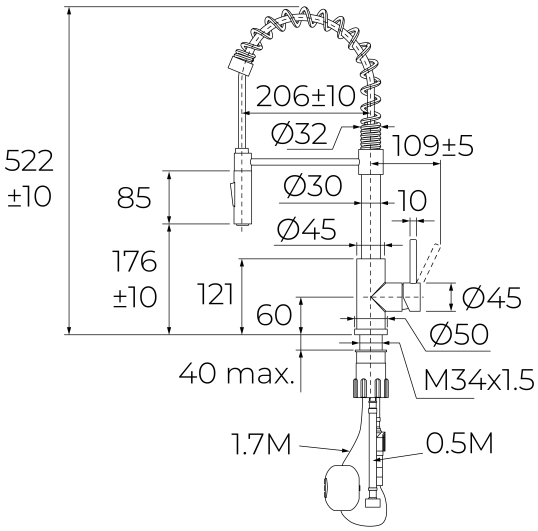

REFERENCE

REF: 116010008 EAN: 8434778036473

FEATURES

Universal Series
Professional kitchen tap
Fully made in high quality stainless steel (AISI 304)
Swivel spout 360º
Pull-down, 2 functions: normal water jet and shower spray
Extra resistant pull-down spring and hose
Anti-scale Eco aerator with water-saving 5 l/min flow restriction
Eco cartridge (C3) with cold start, water and energy savings
Cartridge with ceramic discs of high resistance and smoother movements
EasyQuick fixation system
Highly resistant 3/8” flexible inlet pipes with 1/2” adapters included

DIMENSIONS

Product height (mm): 522
Product width (mm):
Product depth (mm):
Product length (mm):
Net weight (Kg): 2,67

COLOURS

116010008 Stainless steel