CNL 6610

Pull-out hood with finger print proof front panel and 2+1 speeds

LED

Stop Delay Timer

REFERENCE

REF: 40436830 EAN: 8421152146231

FEATURES

Pull-out hood
Electronic control
2 speeds + 1 intensive
Free Outlet exhaust capacity (m3/h): 745
Intensive speed exhaust capacity (m3/h): 694
Max speed exhaust capacity (m3/h): 445
Min speed exhaust capacity (m3/h): 330
Intensive speed sound level (dBA): 70
Max speed sound level (dBA): 63
Min speed sound level (dBA): 60
2 LED lamps
2 aluminium filter
Stop delay timer
Fingerprint proof front panel
Exchangeable Front Panel
Anti-return valve included
Outlet reduction included
Optional Charcoal Filter: D4C

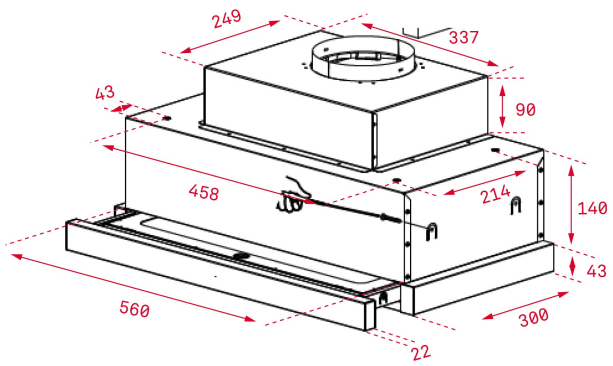

DIMENSIONS

Product height (mm): 274
Product width (mm): 600
Product depth (mm): 300/490
Product length (mm):
Net weight (Kg): 8,33

TECHNICAL DETAILS

Energy Efficiency Class: C
Noise (LwA) Min Speed (dB): 59,8
Noise (LwA) Max Speed (dB): 62,6
Noise (LwA) Boost Speed (dB): 70,1
Ø Outlet (mm): 150

COLOURS

40436830 Stainless steel