GFH 73

Built-in hood with push buttons control panel and 2 aluminum filters, 73cm





LED

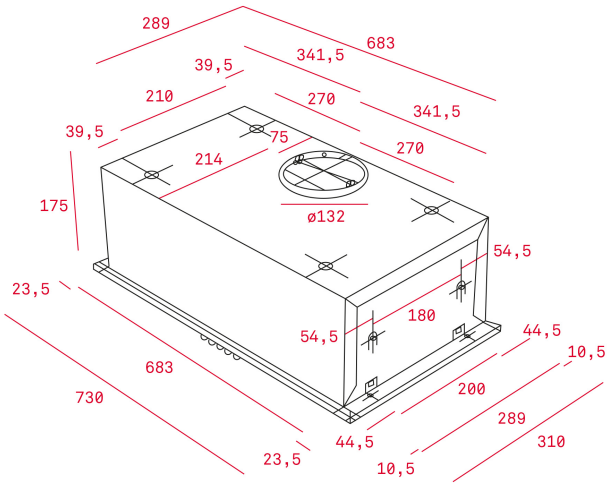

REFERENCE

REF: 40446710 **EAN:** 8421152036402

FEATURES

Built-in hood
Push buttons control
3 speeds
Free Outlet exhaust capacity (m3/h): 367
Max speed exhaust capacity (m3/h): 329
Min speed exhaust capacity (m3/h): 223
Max speed sound level (dBA): 52
Min speed sound level (dBA): 42
2 LED lamps
2 aluminium filters
Operating pilot light
Anti-return valve included
Optional Charcoal Filter: CNL 1C

DIMENSIONS

Product height (mm): 175
Product width (mm): 730
Product depth (mm): 310
Product length (mm):
Net weight (Kg): 6,2

TECHNICAL DETAILS

Energy Efficiency Class: D
Noise (LwA) Min Speed (dB): 53
Noise (LwA) Max Speed (dB): 67
Noise (LwA) Boost Speed (dB): N/A
Ø Outlet (mm): 120

COLOURS

40446710 Stainless steel