GFG2
Built-in hood with push buttons control panel and 1 aluminum filters

LED

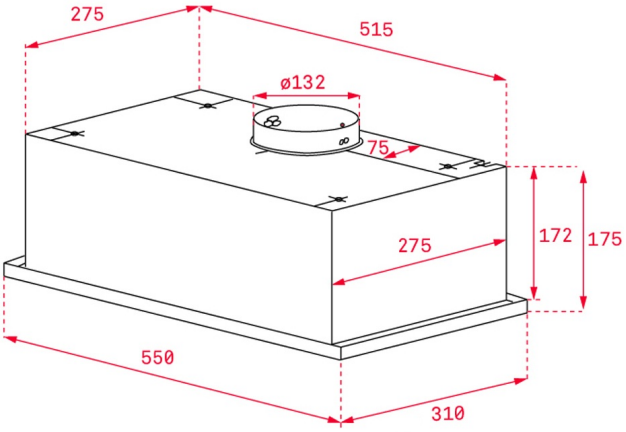

REFERENCE

REF: 40446752 EAN: 8421152121238

FEATURES

Built-in hood
Push buttons control
3 speeds
Free Outlet exhaust capacity (m3/h): 444
Max speed exhaust capacity (m3/h): 329
Min speed exhaust capacity (m3/h): 223
Max speed sound level (dBA): 67
Min speed sound level (dBA): 53
1 LED lamp
1 aluminium filter
Anti-return valve included
Optional Charcoal Filter: CNL 1C

DIMENSIONS

Product height (mm): 178
Product width (mm): 550
Product depth (mm): 310
Product length (mm):
Net weight (Kg): 5,53

TECHNICAL DETAILS

Energy Efficiency Class: D
Noise (LwA) Min Speed (dB): 53
Noise (LwA) Max Speed (dB): 67
Noise (LwA) Boost Speed (dB): 0
Ø Outlet (mm): 120

COLOURS