DHT 1285 SS

Built-In ceiling hood with contour Rim extraction



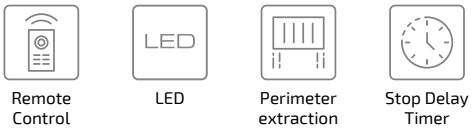

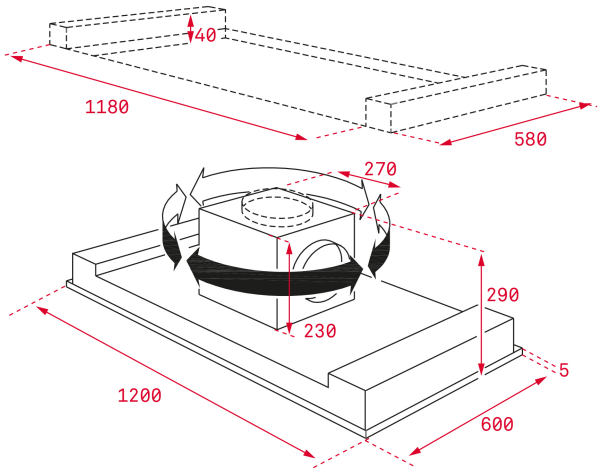

REFERENCE

REF: 40484180 **EAN:** 8421152145890

FEATURES

Decorative island hood
Push buttons control
Rim extraction
Remote control
3 speeds + 1 intensive
Free Outlet exhaust capacity (m3/h): 920
Max speed exhaust capacity (m3/h): 631
Min speed exhaust capacity (m3/h): 315
Intensive speed exhaust capacity (m3/h): 807
Intensive speed sound level (dBA): 66
Max speed sound level (dBA): 60
Min speed sound level (dBA): 47
4 LED lamps
4 Aluminum filter
Stop delay timer
Filter saturation indicator
Operating pilot light
Anti-return valve included
Outlet reduction included
Optional recirculation kit with tube cover installation: ZUB 9015

DIMENSIONS

Product height (mm): 305
Product width (mm): 1200
Product depth (mm): 600
Product length (mm):
Net weight (Kg): 27,9

TECHNICAL DETAILS

Energy Efficiency Class: A
Noise (LwA) Min Speed (dB): 47
Noise (LwA) Max Speed (dB): 60
Noise (LwA) Boost Speed (dB): 66
Ø Outlet (mm): 150

COLOURS

40484180 Stainless steel