DLH 686 T

Decorative hood with touch control display and EcoPower motor, A+

LED

Stop Delay Timer

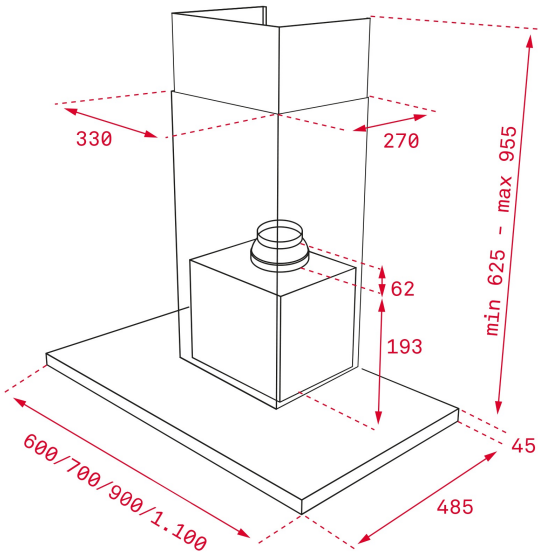

REFERENCE

REF: 40487180 EAN: 8421152157428

FEATURES

Decorative horizontal hood
Electronic control with display
3 speeds + 1 intensive
Free Outlet exhaust capacity (m3/h): 920
Intensive speed exhaust capacity (m3/h):701
Max speed exhaust capacity (m3/h): 584
Min speed exhaust capacity (m3/h): 303
Intensive speed sound level (dBA):720
Max speed sound level (dBA): 69
Min speed sound level (dBA): 53
1 LED lamp
2 Stainless Steel filters
Stop delay timer
Filter saturation indicator
Operating pilot light
Anti-return valve included
Outlet reduction included

DIMENSIONS

Product height (mm): 670-1000
Product width (mm): 600
Product depth (mm): 480
Product length (mm):
Net weight (Kg): 13,37

TECHNICAL DETAILS

Energy Efficiency Class: A+
Noise (LwA) Min Speed (dB): 53
Noise (LwA) Max Speed (dB): 69
Noise (LwA) Boost Speed (dB): 72
Ø Outlet (mm): 150

COLOURS

40487180 Black glass with steel