iOven
Multifunction oven with full touch display, 50 recipes and SteamBox

70L | Full extension guides: 100% extraction | MeatProbe | HydroClean steam cleaning system | SoftClose

SurroundTemp | The SteamBox Included

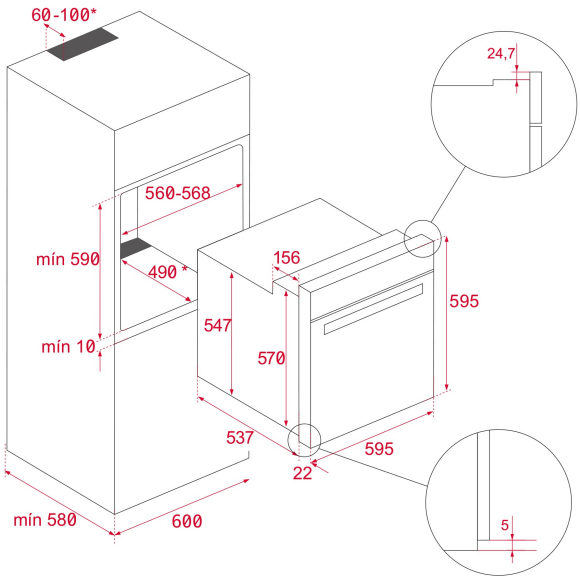

REFERENCE

REF: 41560160 EAN: 8421152148976

FEATURES

Multifunction SurroundTemp oven
18 cooking functions
Automatic HydroClean system
Full touch control display
Electronic timer (Delay/Start function)
Personal cooking assistant: 50 automatic programs
Chrome supports with 5 cooking levels
Full-extension telescopic guides
Plus-extension telescopic guides
Removable quadruple glazed door
SoftClose system
Automatic disconnection safety system
Children safety lock
Automatic quick preheating
Anti-tip deep tray, baking tray and reinforced grid
The SteamBox included
MeatProbe included
Capacity (gross/net): 71 / 70 litres

DIMENSIONS

Product height (mm): 595
Product width (mm): 595
Product depth (mm): 537+22
Product length (mm):
Net weight (Kg): 40

TECHNICAL DETAILS

Energy Efficiency Class: A+
Power rate (V): 220-240
Frequency (Hz): 50/60
Maximum Nominal Power (W): 3198

COLOURS

41560160 Black glass with frame