HLC 847 C BK-SS

Multifunction compact oven with microwave, 16 cooking functions and HydroClean system

Defrost By Time | Defrost By Weight | 40L | HydroClean steam cleaning system | SoftClose

SurroundTemp

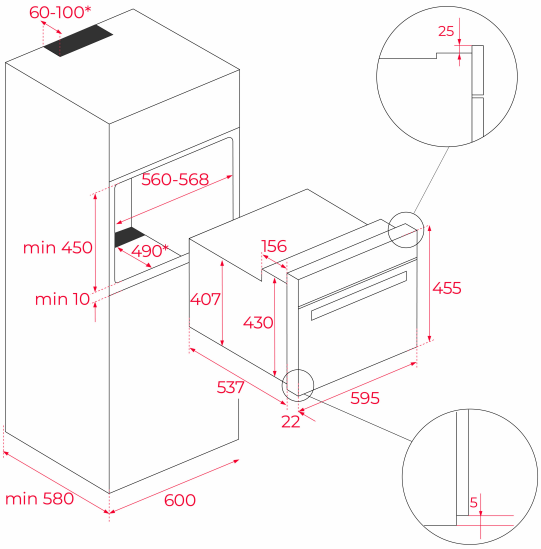

REFERENCE

REF: 40587601 EAN: 8421152145456

FEATURES

Multifunction SurroundTemp oven + Microwave
16 cooking functions
5 power levels + 1000 W microwave power
1400 W grill
Defrost by time and weigh
Automatic HydroClean system
Touch control display with knobs
Electronic timer (Delay/Start function)
Personal cooking assistant: 20 automatic programs
Slow cook function
Chrome supports with 5 cooking levels
Plus Extension Telescopic guides
Removable triple glazed door
SoftClose system
Automatic disconnection security system
Children safety lock
Automatic quick heating
Anti-tip glass tray and reinforced grid
Capacity (gross/net): 41 / 40 litres

DIMENSIONS

Product height (mm): 455
Product width (mm): 595
Product depth (mm): 559
Product length (mm):
Net weight (Kg): 31,5

TECHNICAL DETAILS

Energy Efficiency Class: -
Power rate (V): 220-240
Frequency (Hz): 50
Maximum Nominal Power (W): 3400

COLOURS

40587601 Black glass with frame