EFX 30.1 2P
Modular electric cooking plate with mechanical timer, 30cm

Auto ignition

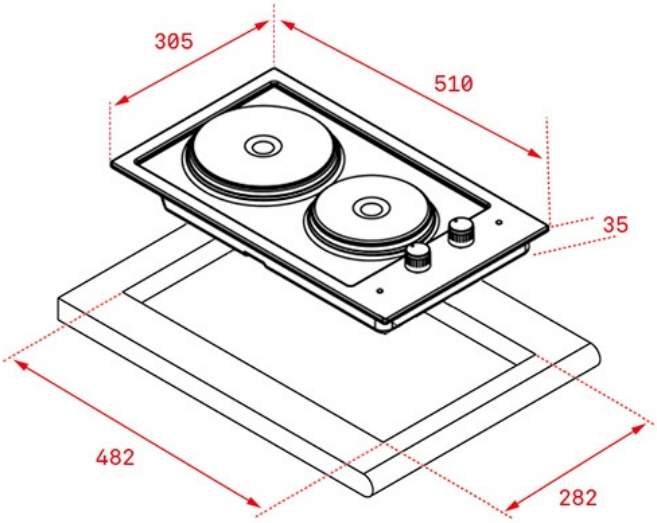

REFERENCE

REF: 40214507 EAN: 8421152158685

FEATURES

Modular vitroceramic hob
Frontal control knobs
2 cooking zones
1 high lights Ø 180 mm
1 high lights Ø 145 mm
Stainless steel surface
Auto-lock safety system
Maximum nominal power 3000 W

DIMENSIONS

Product height (mm): 45
Product width (mm): 305
Product depth (mm): 510
Product length (mm):
Net weight (Kg): 5,2

TECHNICAL DETAILS

Power rate (V): 127
Frequency (Hz): 50/60
Maximum Nominal Power (W): -

COLOURS

40214507 Stainless steel

ENERGY EFFICIENCY

Power consumption in standby mode (W): -
Time to reach standby mode (min): -