IZS 34600 DMS

VarioPro Series. Modular induction hob with SlideCooking system and 4 cooking zones

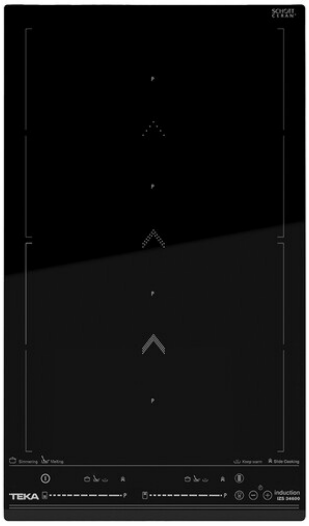

MultiSlider

Autolock

Power

Power Plus

Easy installation

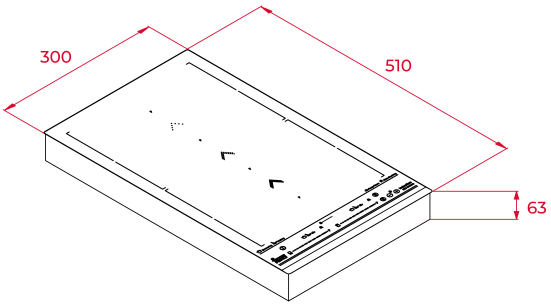

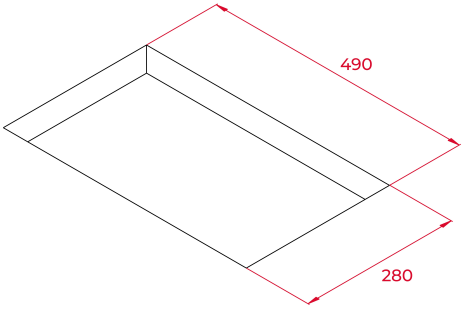

REFERENCE

REF: 112500000 EAN: 8434778000894

FEATURES

Urban Colors Edition
VarioPro Series
Modular Flex Induction hob
SlideCooking function
Direct functions with temperature sensors: Simmering, melting and keep warm
Touch Control MultiSlider
2 cooking zones
2 zones Ø 255 x 200 mm
Ceramic glass surface
Auto-lock safety system
Cooking timer
Power plus
Child lock
Residual heat indicator
Power management
Easy installation kit
Maximum nominal power 3500 W
Optional: Grilling Plate
Optional: Teppanyaki

DIMENSIONS

Product height (mm): 63
Product width (mm): 300
Product depth (mm): 510
Product length (mm):
Net weight (Kg): 6,915

TECHNICAL DETAILS

Power rate (V): 220-240
Frequency (Hz): 50/60
Maximum Nominal Power (W): -

COLOURS

112500000 Black glass

ENERGY EFFICIENCY

Power consumption in standby mode (W): -
Time to reach standby mode (min): -