MWR 32 BI
Country Style Edition. Compact built-in microwave with grill and ceramic base, 45cm

Defrost By Time

32L

REFERENCE

REF: 111940001 EAN: 8434778008876

FEATURES

Country Style Edition
Microwave + Grill
3 cooking functions
5 power levels + 1000 W microwave power
1500 W grill
Defrost by time
Mechanical control knobs
Mechanical timer (Stop function)
Removable triple glazed door
Automatic disconnection security system
Capacity (gross/net): 38 / 32 litres

DIMENSIONS

Product height (mm): 455
Product width (mm): 595
Product depth (mm): 472
Product length (mm):
Net weight (Kg): 32

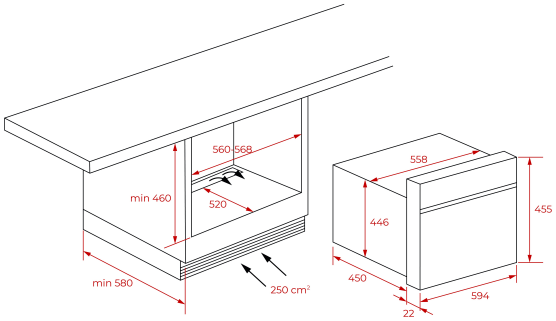

TECHNICAL DETAILS

MWO Power (W): 1000
Frequency (Hz): 50
Maximum Nominal Power (W): 3300
Grill (W): 1500

COLOURS

111940001 Vanilla silver

40586034 Anthracite silver

40586034 Vanilla brass

40586034 Anthracite brass