EFX 32300 IH

Modular induction hob with touch control and 2 cooking zones

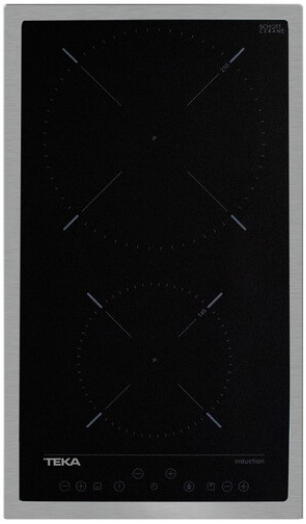

REFERENCE

REF: 112510006 EAN: 8434778003529

FEATURES

Modular induction hob
Touch Control
2 cooking zones
1 high lights Ø 210 mm
1 high lights Ø 145 mm
Stainless steel surface
Auto-lock safety system
Cooking timer
Power plus
Child lock
Residual heat indicator
Maximum nominal power 3600 W

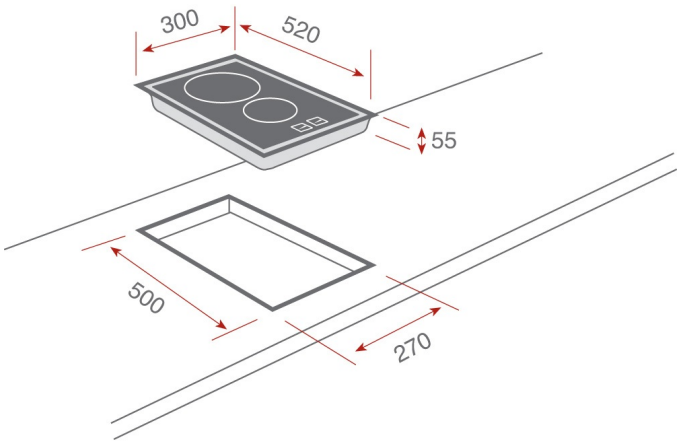

DIMENSIONS

Product height (mm):
Product width (mm):
Product depth (mm):
Product length (mm):
Net weight (Kg): 4,3

TECHNICAL DETAILS

Power rate (V): -
Frequency (Hz): -
Maximum Nominal Power (W): -

COLOURS

112510006 Stainless steel

ENERGY EFFICIENCY

Power consumption in standby mode (W): -
Time to reach standby mode (min): -