TBC 32010 TTC

Urban Colors Edition. Vitroceramic hob with touch control and 2 cooking zones, 30cm

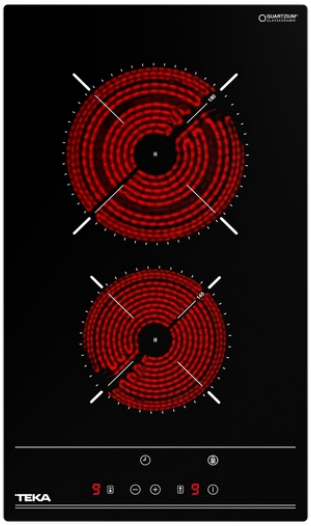

Autolock

Syncro function

Easy installation

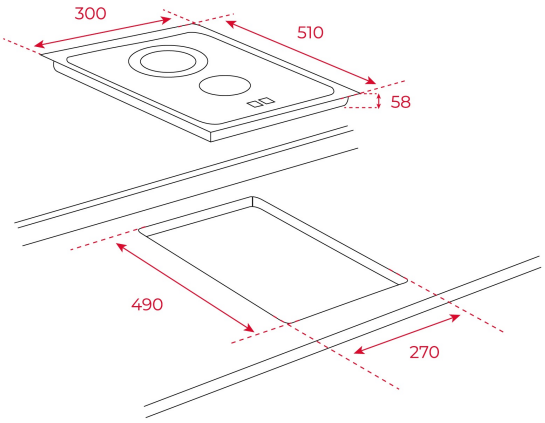

REFERENCE

REF: 112550007 EAN: 8434778012668

FEATURES

Urban Colors Edition
Modular vitroceramic hob
Touch Control
2 cooking zones
1 high lights Ø 180 mm
1 high lights Ø 145 mm
Ceramic glass surface
Auto-lock safety system
Residual heat indicator
Easy installation kit
Maximum nominal power 3000 W
Optional: Grilling plate
Optional: Teppanyaki

DIMENSIONS

Product height (mm): 58
Product width (mm): 300
Product depth (mm): 510
Product length (mm):
Net weight (Kg): 4,26

TECHNICAL DETAILS

Power rate (V): 220-240
Frequency (Hz): 50/60
Maximum Nominal Power (W): -

COLOURS

112550007 Black glass

ENERGY EFFICIENCY

Power consumption in standby mode (W): -
Time to reach standby mode (min): -