EWH 30 C

Water heater with vertical installation and 30L capacity

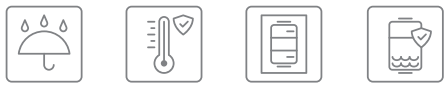

Humidity Control | Overheating Protection | Slim heater | Dry Heating Protection

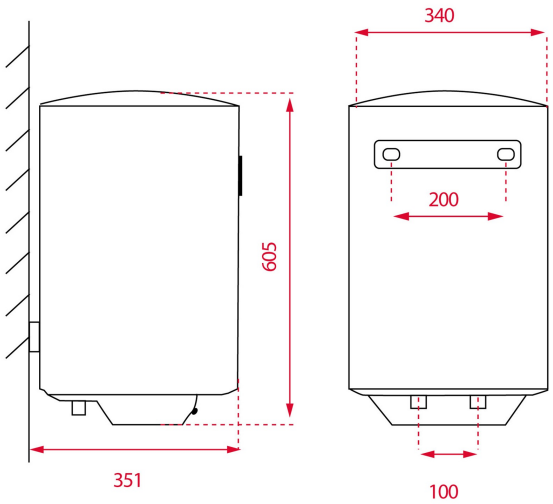

REFERENCE

REF: 111720001 EAN: 8434778012958

FEATURES

Vertical installation
Capacity: 30 litres
Average number of users: 1-2
Tank ultra-resistant protective polish
Enamelled heating element
Temperature regulation 30º - 75º C
Max input pressure: 0.75 Mpa
Thermometer
Over-pressure protection
Over-heating protection
Humidity protection
Dry-heating protection
Power rate: 1500 W
Isolation thickness: 20 mm

DIMENSIONS

Product height (mm): 605
Product width (mm): 340
Product depth (mm): 340
Product length (mm):
Net weight (Kg): 14,8

COLOURS

111720001 White