EWH 100 C

Water heater with vertical installation and 100L capacity

Humidity Control | Overheating Protection | Dry Heating Protection

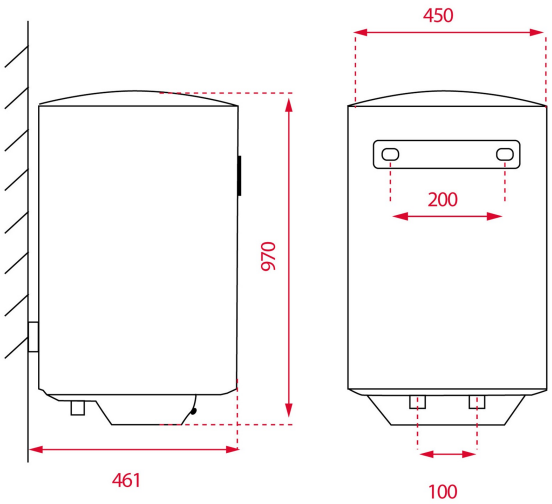

REFERENCE

REF: 111720004 EAN: 8434778012989

FEATURES

Vertical installation
Capacity: 100 litres
Average number of users: 3-5
Enamelled heating element
Temperature regulation 30º - 70º C
Max input pressure: 0.75 Mpa
Thermometer
Over-heating protection
Humidity protection
Dry-heating protection
Power rate: 1500 W
Isolation thickness: 20 mm

DIMENSIONS

Product height (mm): 970
Product width (mm): 450
Product depth (mm): 450
Product length (mm):
Net weight (Kg): 30,9

COLOURS

111720004 White