DSI 44700 SS
ExpertCare Series semi integrated dishwasher with 9 place settings and 7 washing programs, 45cm

Eco Function

Extra Dry function

AquaLogic

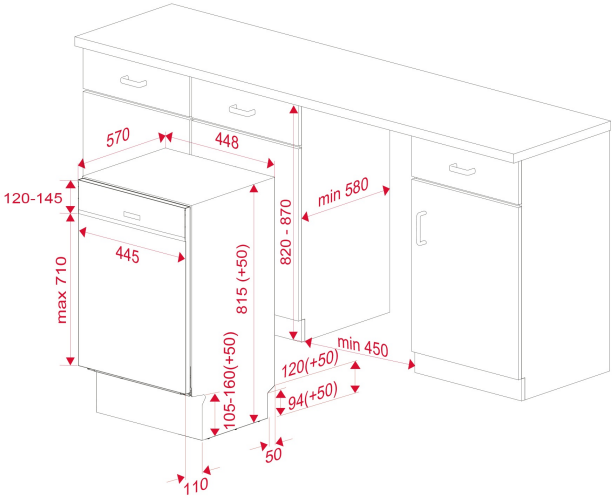

REFERENCE

REF: 114310002 EAN: 8434778013733

FEATURES

ExpertCare series
Partially integrated Dishwasher
Electronic control panel with display
Capacity: 9 plate settings
Washing programs: 7
Washing temperatures: 45°, 55°, 60°, 65°, 70°C
SmartSensor measure the level of dirtiness
MultiCleaner Sensor
FlexiSet 2 lower basket
Special programs: AutoClean, AutoProgram, Intensive program, ECO program, 1-Hour, Whisper program, PreWash
Special functions: Half load, Express, ExtraDry
AquaStop and AquaSafe safety systems
Low salt and rinse indicator
Adjustable upper basket
Delay timer: 1-24 hours
Noise level: 47 dBA
Adjustable back feet from front
Sliding Detergent drawer
Column installation

DIMENSIONS

Product height (mm): 815
Product width (mm): 448
Product depth (mm): 570
Product length (mm):
Net weight (Kg): 31

TECHNICAL DETAILS

Energy Efficiency Class: A++
Energy Consumption (Kw/day): -
Water consumption (litres/year): 2520
Noise Level (dBA): 47
Power rate (V): 220
Frequency (Hz): 50

COLOURS

114310002 Stainless steel