IZF 88700 MST BK
Urban Colors Edition. DirectSense FullFlex induction hob with temperature sensors

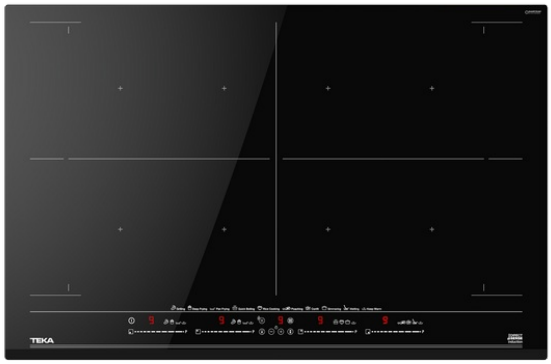

MultiSlider

Autolock

Power

Power Plus

Easy installation

Flex

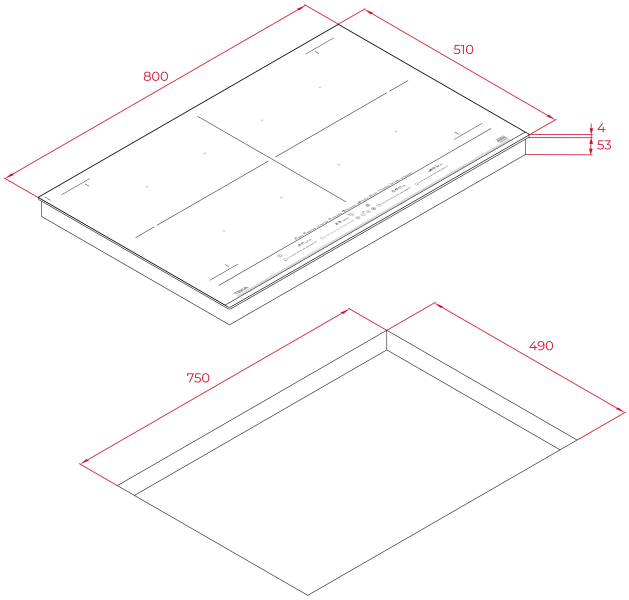

REFERENCE

REF: 112500029 EAN: 8434778011845

FEATURES

Urban Colors Edition
MasterSense Series
FullFlex Induction hob
SlideCooking Function
Direct functions with temperature sensors: Rice cooking, keep warm, confit, poaching, grilling,keep warm, pan frying, deep frying, quick boiling, simmering and melting.
Touch Control MultiSlider
4 cooking zones
4 zones Ø 296,5 X 197,5 mm
Ceramic glass surface
Auto-lock safety system
Cooking timer
Power plus child lock
Residual heat indicator
Power management
Easy installation kit
Maximum nominal power 7400 W

DIMENSIONS

Product height (mm): 57
Product width (mm): 800
Product depth (mm): 510
Product length (mm):
Net weight (Kg): 15

TECHNICAL DETAILS

Power rate (V): 220-240
Frequency (Hz): 50/60
Maximum Nominal Power (W): 7400

COLOURS

112500029 Black glass

ENERGY EFFICIENCY

Power consumption in standby mode (W): 0.4
Time to reach standby mode (min): 1