CI3 350 NF EU
No Frost built-in bottom freezer refrigerator with inverter motor and antibacterial gasket

Motor Inverter | Easy 90 | Fresh Box | LED | Zero Box

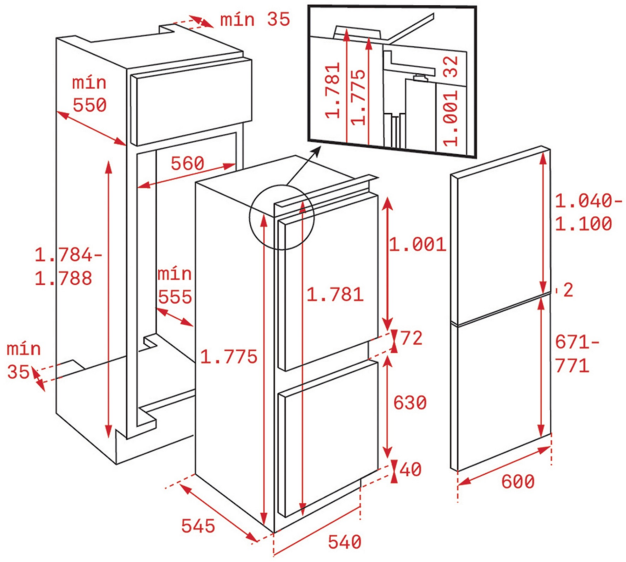

REFERENCE

REF: 113560005 EAN: 8434778014068

FEATURES

Built-in bottom freezer refrigerator
No Frost in freezer
Inverter motor
Inner control display
Electronic adjustable thermostat
FreshBox drawer
3 safety glass shelves
Fast freezing function
Front adjustable feet
LED Illumination
Reversible doors
Climate class: SN/ST
Total capacity (gross/net): 275 / 255 litres
Bottle rack and ice cube tray included

DIMENSIONS

Product height (mm): 1775
Product width (mm): 540
Product depth (mm): 545
Product length (mm):
Net weight (Kg): 57,5

TECHNICAL DETAILS

Energy efficiency class (UE 2019/2016): A++
Climate Class: SN/ST
Energy Consumption (Kw/day): 0,657
Annual Consumption (kWh/year): 240
Freezing Capacity: 3,5
Noise Level (dBA): 38
Power rate (V): 220-240
Frequency (Hz): 50

COLOURS