TKI4 215 EU
Built-in refrigerator with freezer drawer, inverter motor and antibacterial gasket

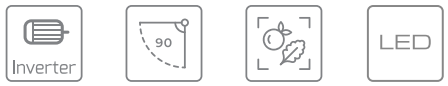

Motor Inverter | Easy 90 | Fresh Box | LED

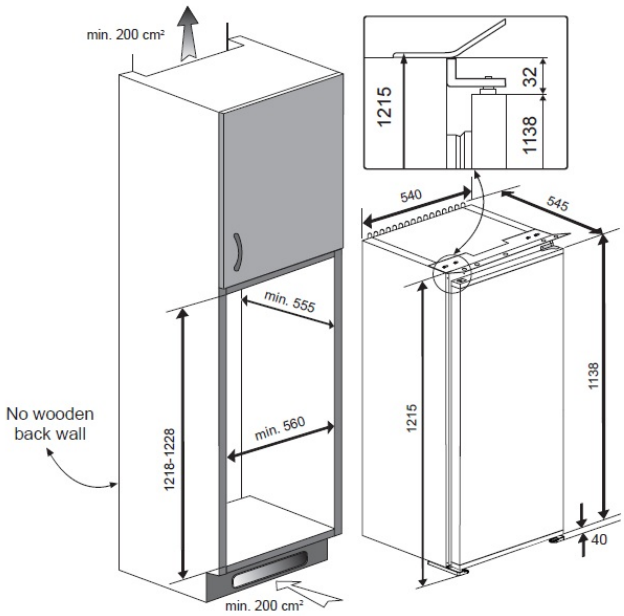

REFERENCE

REF: 113470003 EAN: 8434778014211

FEATURES

Built-in top freezer refrigerator
Manual defrost
Manual adjustable thermostat
FreshBox drawers
4 safety glass shelves
Front adjustable feet
LED Illumination
Reversible doors
Climate class: SN/ST
Total capacity (gross/net): 210 / 175 litres
Ice cube tray and bottle rack included

DIMENSIONS

Product height (mm): 1215
Product width (mm): 540
Product depth (mm): 545
Product length (mm):
Net weight (Kg): 38,5

TECHNICAL DETAILS

Energy efficiency class (UE 2019/2016): A+
Climate Class: SN/ST
Energy Consumption (Kw/day): 0,58
Annual Consumption (kWh/year): 211
Freezing Capacity: 2
Noise Level (dBA): 35
Power rate (V): 220-240
Frequency (Hz): 50

COLOURS