JZC 94313 CB

Urban Colors Edition. Gas and induction hob with direct functions and 4 cooking zones

MultiSlider | Auto ignition | Autolock | Power | Power Plus

Easy installation

REFERENCE

REF: 112570162 EAN: 8434778017663

FEATURES

Urban Colors Edition
Gas on glass + Induction hob
ExactFlame
Frontal control knobs + Touch Control MultiSlider
4 cooking zones
1 double ring burner, 4.00 kW
1 zone Ø 180/280 mm
1 zone Ø 180 mm
1 zone Ø 145 mm
Ceramic glass surface
Auto ignition
Auto-lock safety system
Cast iron grids
Indution:
Cooking timer
Power plus
Child lock
Residual heat indicator
Power management
Easy installation kit
Maximum nominal power(Gas) 4000 W
Maximum nominal power(Induction) 7200 W
Wok support included
Silver knobs accessory available

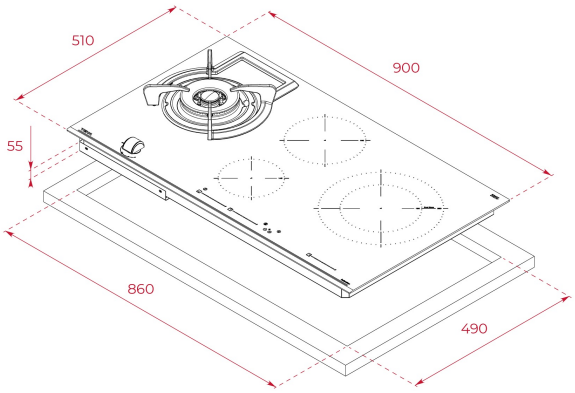

DIMENSIONS

Product height (mm): 98
Product width (mm): 900
Product depth (mm): 510
Product length (mm):
Net weight (Kg): 16,4

TECHNICAL DETAILS

Power rate (V): 220-240
Frequency (Hz): 50/60
Maximum Nominal Power (W): 7200

COLOURS

112570162 Black glass

ENERGY EFFICIENCY

Power consumption in standby mode (W): -
Time to reach standby mode (min): -