GZC 64320 XB

Urban Colors Edition. Gas on Glass hob with ExactFlame function of natural gas




Auto ignition


Autolock


ExactFlame


Easy installation

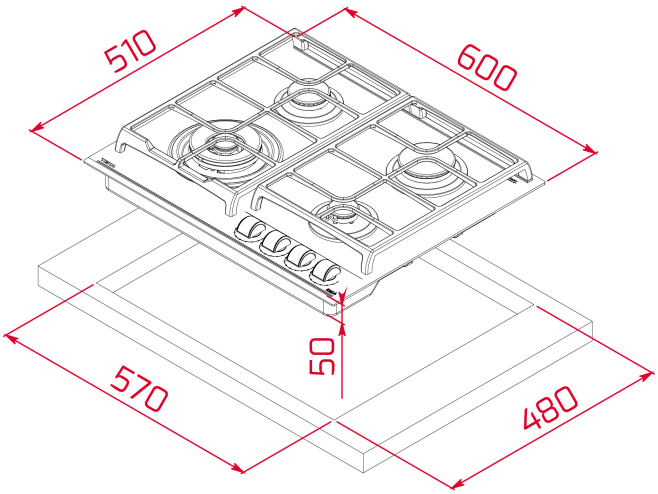

REFERENCE

REF: 112570168 **EAN:** 8434778019087

FEATURES

Urban Colors Edition
Gas on glass hob
ExactFlame
Frontal control knobs with ergonomic design
4 cooking zones
1 double ring burner, 4.00 kW
1 fast burner, 2.8 kW
1 semi fast burner, 1.7 kW
1 auxiliary burner, 1 kW
Tempered glass surface
Auto ignition
Auto-lock safety system
Cast iron grids
Easy installation kit
Maximum nominal power 9550 W
Optional: Wok support
Silver knobs accessory available

DIMENSIONS

Product height (mm): 98
Product width (mm): 600
Product depth (mm): 510
Product length (mm):
Net weight (Kg): 14,8

TECHNICAL DETAILS

Power rate (V): 220-240
Frequency (Hz): 50/60
Maximum Nominal Power (W): -

COLOURS

112570168 White

ENERGY EFFICIENCY

Power consumption in standby mode (W): -
Time to reach standby mode (min): -