# GZC 64300 XB

Urban Colors Edition. Gas on Glass hob with ExactFlame function

Auto ignition | Autolock | ExactFlame | Easy installation

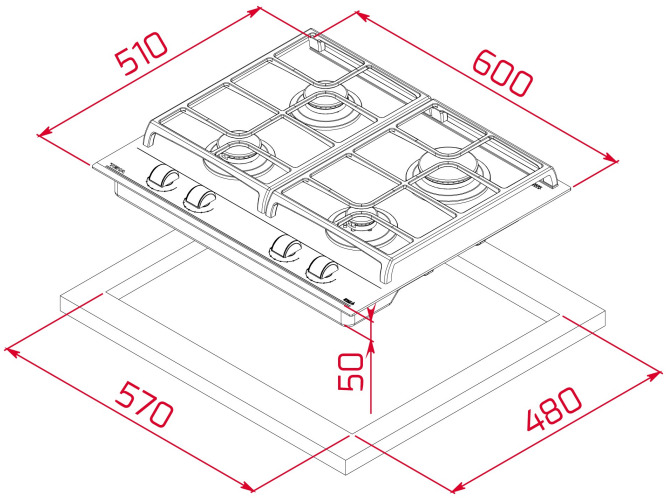


## REFERENCE

REF: 112570194 EAN: 8434778019438

## FEATURES

Urban Colors Edition
Gas on glass hob
ExactFlame
Frontal control knobs with ergonomic design
4 cooking zones
1 fast burner, 2.8 kW
1 semi fast burner, 1.7 kW
1 semi fast burner, 1.4 kW
1 auxiliary burner, 1 kW
Ceramic glass surface
Auto ignition
Auto-lock safety system
Cast iron grids
Easy installation kit
Maximum nominal power 6950 W
Silver knobs accessory available

## DIMENSIONS

**Product height (mm):** 98
**Product width (mm):** 600
**Product depth (mm):** 510
**Product length (mm):**
**Net weight (Kg):** 11,14

## TECHNICAL DETAILS

Power rate (V): 220-240
Frequency (Hz): 50/60
Maximum Nominal Power (W): -

## COLOURS

112570194 Black glass

## ENERGY EFFICIENCY

Power consumption in standby mode (W): -
Time to reach standby mode (min): -