EFX 60.1 4G AI AL CI

Stainless steel gas hob with frontal control knobs of butane and natural gas

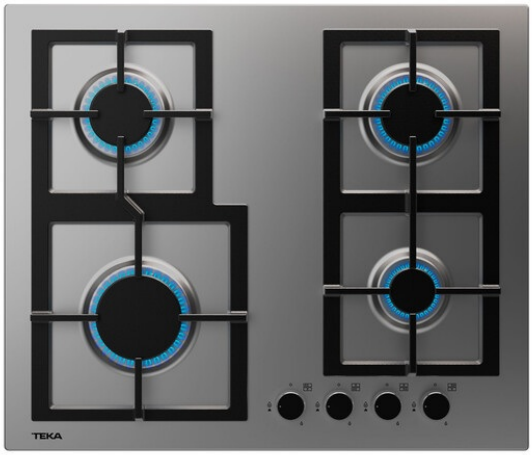

Auto ignition

Autolock

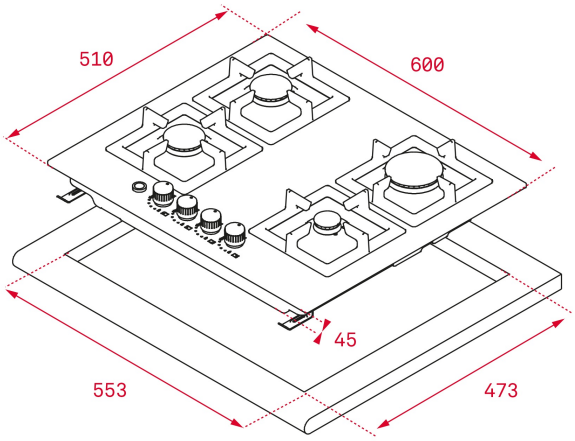

REFERENCE

REF: 112610029 EAN: 8434778018714

FEATURES

Gas hob
Frontal control knobs
4 cooking zones
1 double ring burner, 3.00 kW
2 semi fast burners, 1.7 kW
1 auxiliary burner, 1 kW
Stainless steel surface
Auto ignition
Auto-lock safety system
Cast iron grids
Maximum nominal power 7500 W
Optional: Wok support

DIMENSIONS

Product height (mm): 91
Product width (mm): 600
Product depth (mm): 510
Product length (mm):
Net weight (Kg): 10,7

TECHNICAL DETAILS

Power rate (V): 220-240
Frequency (Hz): 50/60
Maximum Nominal Power (W): -

COLOURS

112610029 Stainless steel

ENERGY EFFICIENCY

Power consumption in standby mode (W): -
Time to reach standby mode (min): -